EL660 PMBus to Ethernet adapter



Product code: 160.02.0660.000.0

Features:
Simple to use power supply (PMBus) to Ethernet adapter for remote surveillance, configuration, and monitoring.

Designed for the PMBus enabled Elreg range of power supplies.

Https webserver inside, **128bit SSL encryption.**

SNMP Protocol with TRAP, SET, and GET on ethernet.
E-mail of trap alarms.

Serial busses:
PMBus
MODBus (isolated RS485) interface
SPI

4 Programmable multi-purpose
Inputs and outputs (“DIGITAL INPUTS” OR
ANALOG signals).

Comprehensive logging

Automatic battery MONITORING
and TEST

Supply voltage 10-42V DC, max 800mW

Ethernet port: 100 Base TX, 10Mbit/100Mbit, RJ45

PMBus Power Management. Defined.
BACnet
Modbus RS485
I2C BUS
PROFI BUS
System Management SMBus
SNMP Simple network management protocol
Modbus TCP
MQTT
AMQP Advanced Message Queuing Protocol
CoAP
TCP/IP
UDP
HTTPS: //

EL660
Product description

The EL660 is a PMBus to ethernet gateway for remote surveillance, monitor and configuration purposes specifically targeted the Elreg PMBus enabled range of power supplies.
The Power Management Bus (PMBus) is an open standard power-management protocol with fully defined commands that support communication with power converters and other digital power-management devices and host processors in a power system. The protocol is implemented over the industry-standard SMBus serial interface and enables programming, control, and real-time monitoring of compliant power conversion products.
EL660 includes a web user interface in form of a http server which listens on a local TCP port, allowing users to interact with EL660 from any device with a modern web browser. The web server is
As standard, the EL660 incorporates the SNMP protocol that enables higher level surveillance systems, which incorporates a SNMP manager, to interact with the EL660 SNMP agent to send a request to obtain the value of a variable or automatically receive an asynchronous alert sent by the agent to the SNMP manager to indicate a significant event, such as an error or failure, has occurred.
To further expand the possibilities, several other protocols which runs on top of TCP or UDP, like MQTT, CoAP, ModBus TCP, AMQP, are available on request.



Data sheet EL660 PMBus to Ethernet adapter	
General	
Operating voltage	9 - 42Vdc
Power consumption	800mW max
Microcontroller inside	32-bit ARM Cortex M4, 180MHz
Connection	Screw terminals max 1,5mm^2
Ethernet:	
Ethernet standard	100 Base TX
Protocols	IP protocols: TCP/IP, HTTP / 128bit SSL encryption, SNMP v3, On request: MQQT, ModBus TCP, CoAP, AMQP, among others.
Default web server IP	192.168.0.101
Connection	Standard RJ45 8 pin modular plug
Recommended cable type	Cat5E
LEDs	Link and Speed indicators
PMBus	
PMBus version	1.1
Max speed	100kBit/s
Default address	24 (hex)
Connection:	Screw terminals max 1,5mm^2
Recommended max cable length	1m
RS485 (MODbus RTU)	
Protocols	MODBus RTU, Slave id 0x11 (hex)
Speed	1200 - 115kBit/s (recommended 9600 bit/s)
Galvanically isolated from GND and Power rails	Yes
Overvoltage and ESD protection	Yes, (Tranzorb diodes)
Connection:	Screw terminals max 1,5mm^2
Recommended max cable length	1200m (depended on speed, cable type, and environmental noise conditions)
Analog and digital I/O	
Digital I/O 1	HCMOS 0V / 3.3V, max sink current 4mA
Digital I/O 2	HCMOS 0V / 3.3V, max sink current 4mA
Analog input 1	0-3Vdc, input impedance 10MOhm, overvoltage protected
Analog input 2	0-3Vdc, input impedance 10MOhm, overvoltage protected
SPI bus	
Max speed	1Mbit/s
Clock and data	HCMOS 3.3V
Connection:	Screw terminals max 1,5mm^2
Recommended max bus length	0,5m
Physical	
Weight	180g
Size	100 x 63 x 25 mm (bxdxh).
Storage	÷40 ˚C til +85 ˚C
Operation	÷30 ˚C til +70 ˚C
Ingress protection	IP20
Mounting	Standard DIN rail TS35
Enclosure material	aluminum
EMC and Safety	
Safety	EN62368-1
EMC conducted	EN55032 (CISPR32), Conduction Class B, Radiation Class A
EMC immunity	EN 61000-6-1, 2, 3, 4
Environment	RoHS

Web interface

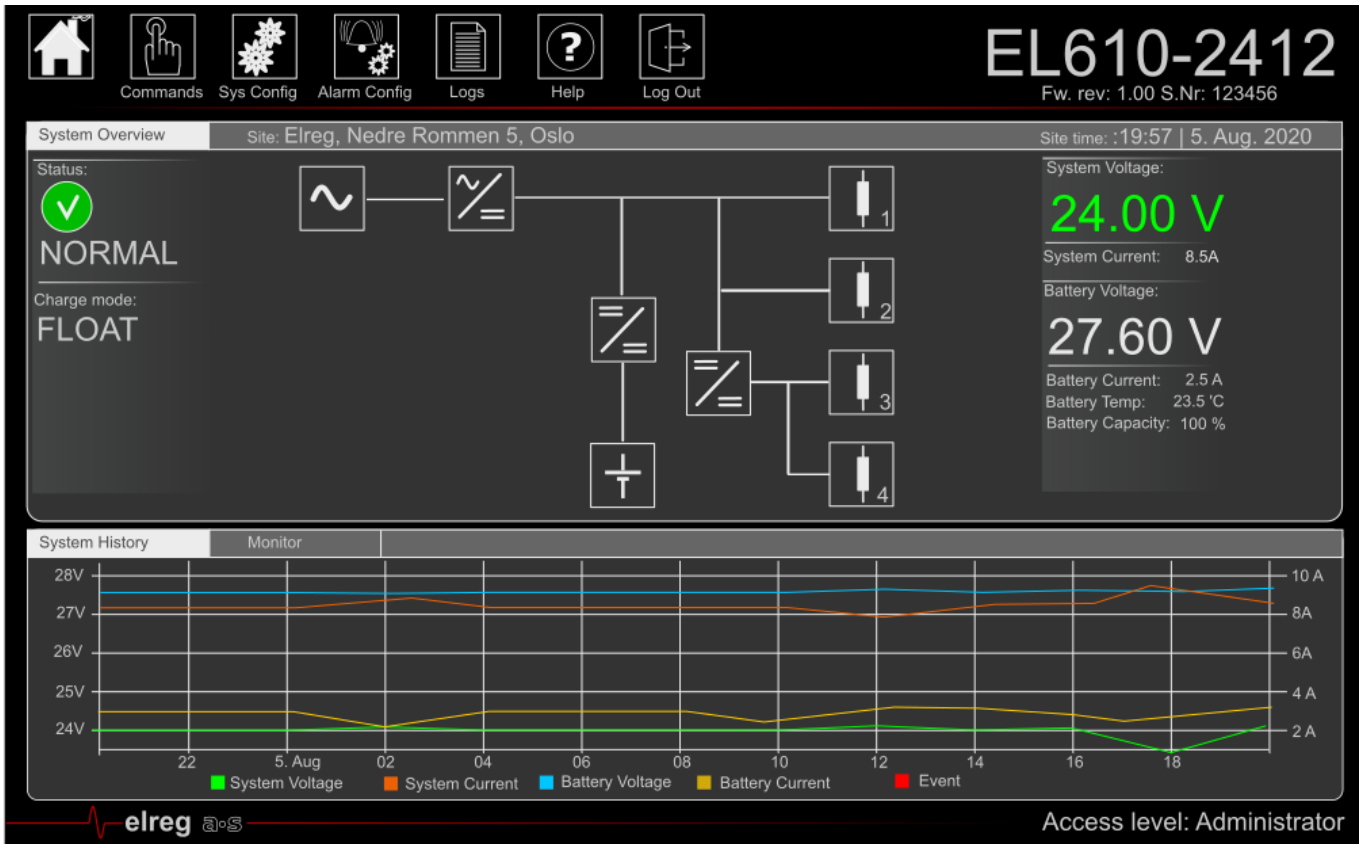

The EL660 Web Interface features:

- Platform independence: The web interface operates in common computer operating system platforms (like Windows®, Mac®, UNIX, etc.) that support standard web browsers capable of running JavaScript. Supported browsers: Mozilla Firefox, Chrome, Safari and IE.
- No software installation on host pc required: Communication with the web interface is facilitated by standard HTTP.
- Field upgrades: EL660 firmware can be upgraded over the network.
- Simultaneous sessions: Multiple login sessions (max 4) are supported, which can be utilized for cooperative troubleshooting efforts, training purposes, or other collaborative, multi-user sessions.
- Security: Several group access levels are provided, restricting unauthorized attempts to alter system settings.
- Protected Operating Firmware: The operating firmware is executed from RAM, so there is no file system to corrupt or damage. The controller's RAM is not accessible externally, which provides excellent security against malicious attacks. In the event that the RAM is corrupted, a controller reboot loads a fresh copy of the operating code.
- Embedded SNMP Agent: Standard SNMP traps are provided upon occurrences of alarm conditions; GET and SET operations are supported to retrieve data and perform remote operations on the power plant. The MIB files are provided with the controller's firmware.

Login and access levels

The controller web interface can be accessed through a network (e.g., a LAN), through the Internet, or through direct Ethernet connection with a computer.

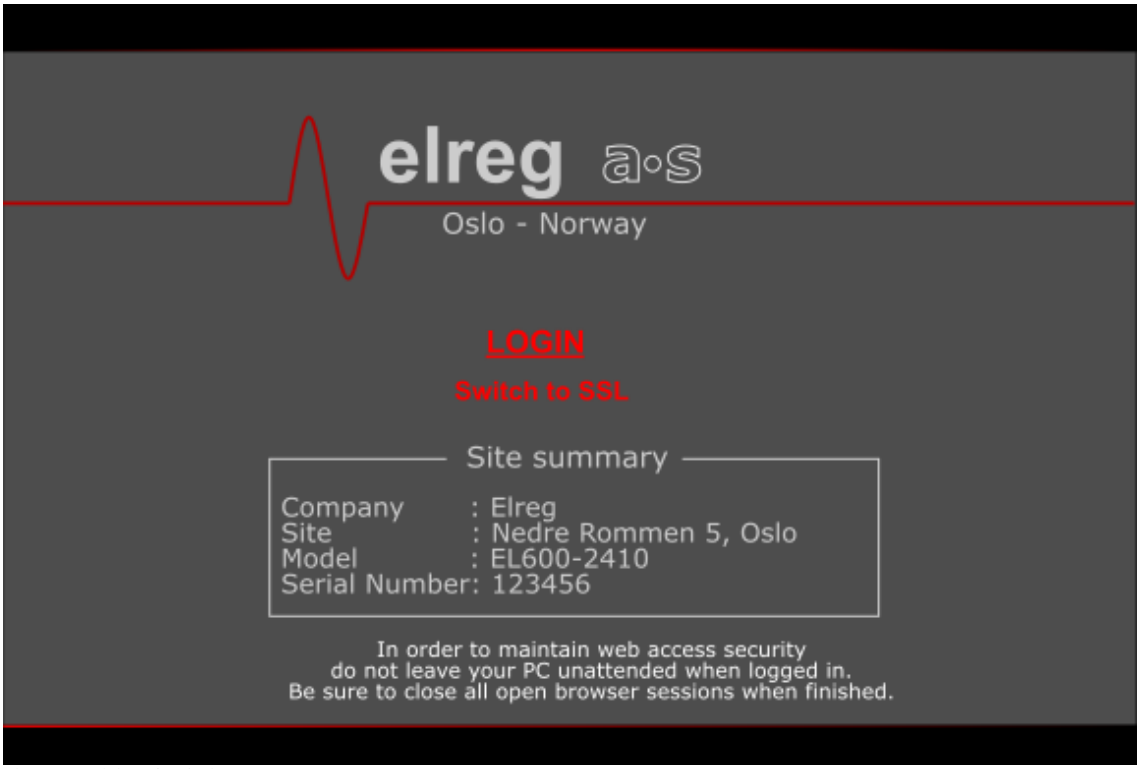

Figure 1. Web interface login page .

• LOGIN – link for a normal connection. User and password input dialog opens when clicked.

• Switch to SSL – link for a Secure Sockets Layer connection

Click on the Switch to SSL link if encrypted, secure communication is required between the computer and controller.
NOTE: Due to strict security settings, some web browsers and local networks may prohibit SSL connections that are missing valid certificates. If access is blocked by the web browser, it may be possible to use an alternate web browser that permits a temporary exception for each session. For example, Mozilla Firefox currently allows users to add a temporary exception when a valid certificate is missing.

User access levels:

#	User Name	Default Psw	Access Level	Notes
1	admin	admin	3 - admin	Administrator access, read-write
2	control	control	2 - control	Control (service) access, read-write
3	status	status	1 - status	Status (view) access, read only
4	(configurable)	(configurable)	3 – admin or 2 – control or 1 - status	User defined
5	(configurable)	(configurable)	3 – admin or 2 – control or 1 - status	User defined
6	(configurable)	(configurable)	3 – admin or 2 – control or 1 - status	User defined

For security reasons, it is advisable to log in with the admin account and change the default passwords. The maximum number of simultaneous logins for each user can be changed, and additional user account types can be configured through the User Accounts configuration page (System Conf. > Device Settings > User Accounts).
Up to three different user accounts can be configured and assigned one of the three access level options.
NOTE: Simultaneous login using one account should be supported, but more logins may reduce bandwidth and slow down controller response.

Access levels define user permissions. There are three principal access levels:
• **Admin:** Read-Write access. Administrator credentials allow changes to be made to all system parameters and must be entered when logging in to the web interface. The default credentials are:
User name: **admin**
Password: **admin**
NOTE: It is not advisable to make this access level widely available as critical changes can be made, especially to user accounts and SNMP configuration.

• **Control:** Read-Write access. Control credentials allow changes to be made to most system parameters but excludes some settings and commands, such as SNMP configuration, user accounts, and the “Delete event log” command.
User name: **control**
Password: **control**
Note: It is advisable to make this access level available for regular maintenance, as it prevents changes from being made to critical features like user accounts and SNMP configuration.

• **Status:** Read-only access. Status access credentials permit viewing parameter setting but prevent making and saving changes. The default credentials are:
User name: **status**
Password: **status**

Note: Username and passwords are case sensitive.

When logged in, the access level is shown in the bottom right corner of the web interface pages.

Example: “Access level: Administrator”

Web interface overview

Upon successful login the home page opens in the web browser. Along the top of the page are category buttons, controller model name, and the software and revision numbers. In the bottom right corner is the access level. The top and bottom information are present at all times in the web interface.

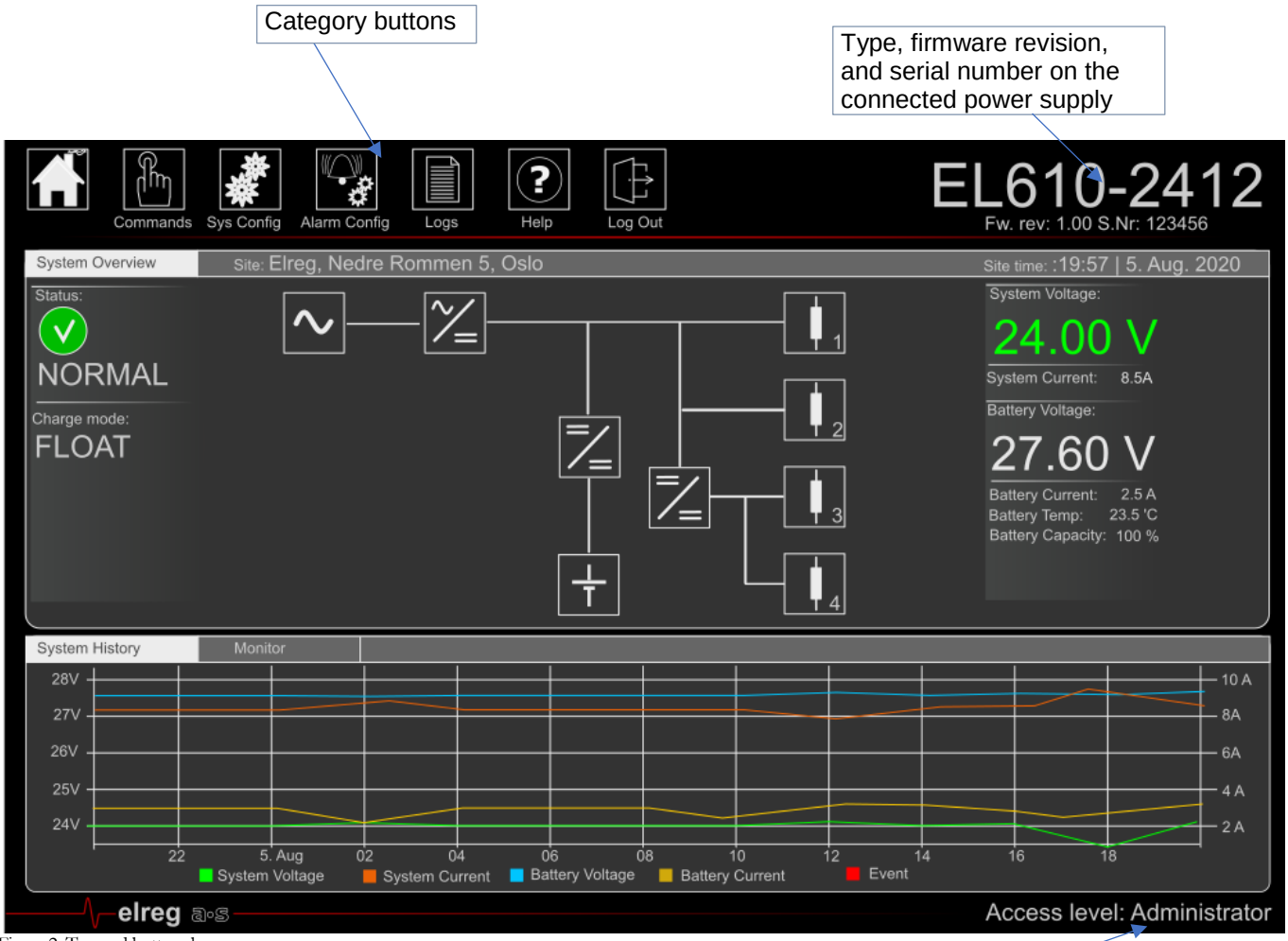

Figure 2. Top and bottom bars

Table 1 Description of category buttons

Category	Description
Home	Read only. Contains system overview window and status notifications. Rolling over and clicking the various icons and boxes provides more detailed system information.
Commands	This section is password protected and should be used by system administrators only. This section is used to execute commands to start and stop specific functions of the power supply. Commands include resetting alarms, starting / stopping battery test, reset system configurations, executing alarm relay tests etc.
Sys Config	This section is password protected and should be used by system administrators only. This section is used to interrogate the system, make changes, or reprogram system parameters. Network config, system voltages, system calibrations, rectifier, dc-dc converter, battery settings, battery test parameters, charger algorithms, etc.
Alarm Config	This section is password protected and should be used by system administrators only. This section is used to configure low voltage battery disconnect, configure alarms and alarm severity levels for ac mains, dc-dc converter, loads, and batteries.
Logs	This section is read only. It displays daily and monthly energy statistics for the highest lowest and average values.
Help	This button opens the user manual in pdf. The user needs internet connection to

	access the document. The document opens in another web window.
Log Out	This button logs out of the web interface, ending the current session. When logged out, the login page is shown.

Home page

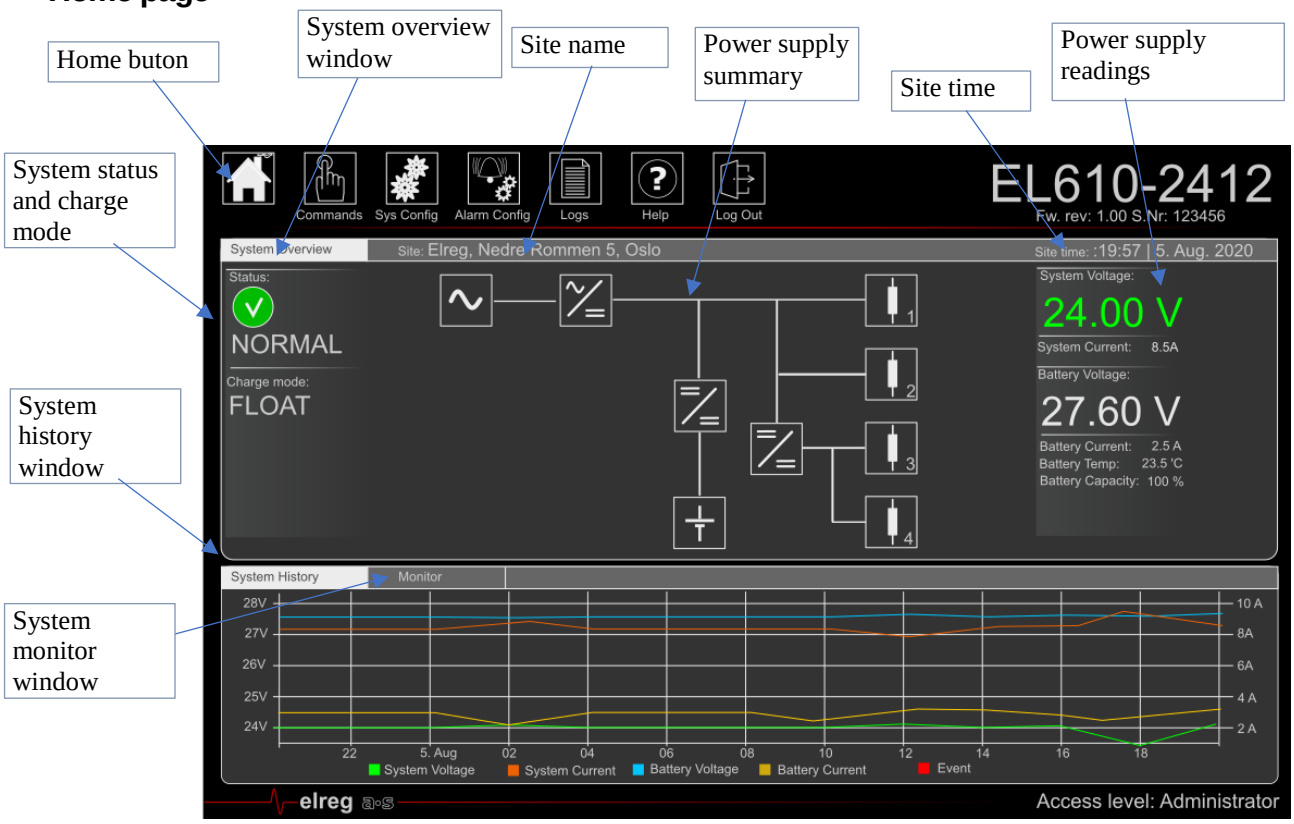

Figure 3. Home screen view and features.

System overview window.

The system overview window provides summary and status information for critical system parameters and components. The panes and buttons in this window can be clicked with the mouse for more information. In addition, the square buttons in this window provides a dynamic status box when hoovered over with the mouse cursor.

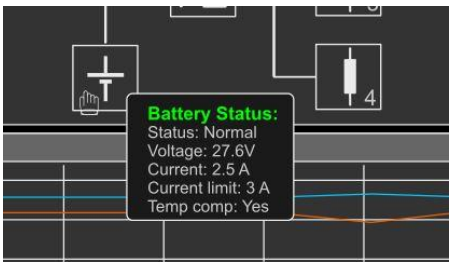

Figure 4. Status Box on Mouse hoover (Example: Battery Status).

System status and operational mode

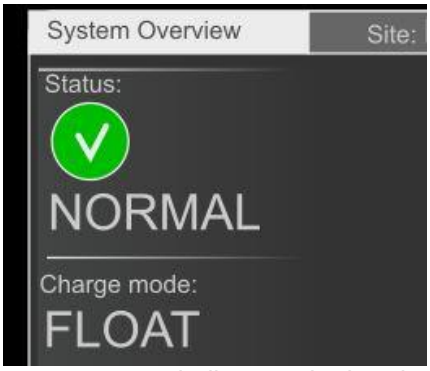

System status indicates whether there is an alarm condition or not. Possible status messages are: **Normal, Minor Alarm, Major Alarm.**
System mode indicates the operational mode of the power supply, especially as related to batteries. The system modes are:
Float, Bulk, BattTest, and Critical. Critical may open the battery disconnect switch.

Power supply components

The major portion of the System Overview Window features a diagram of the power system components. This window will differ according to which type of power supply and it's features that is connected.

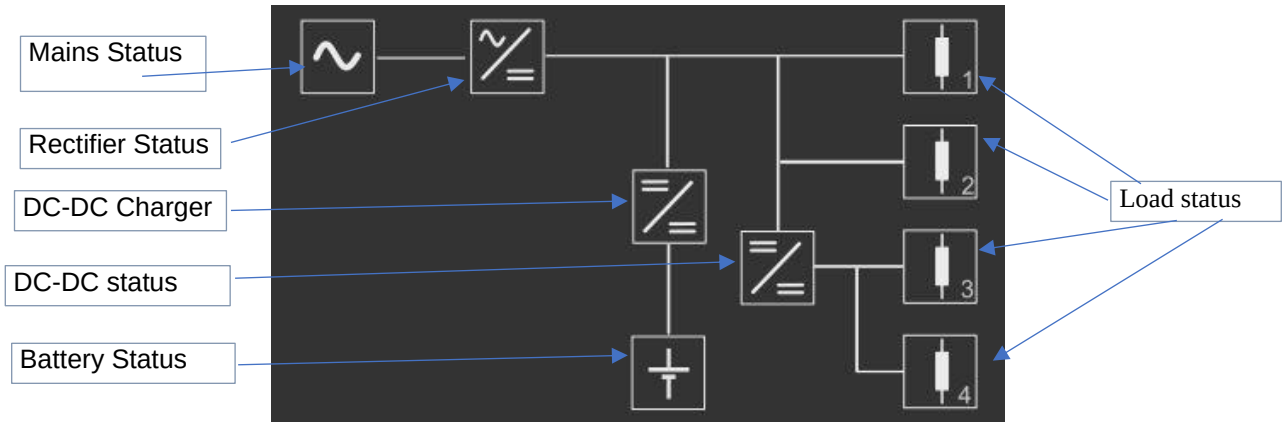

Figure 5. Example of Power supply overview

Alert symbols appear in the corner of the button if there is an alarm or notice that affects the component.

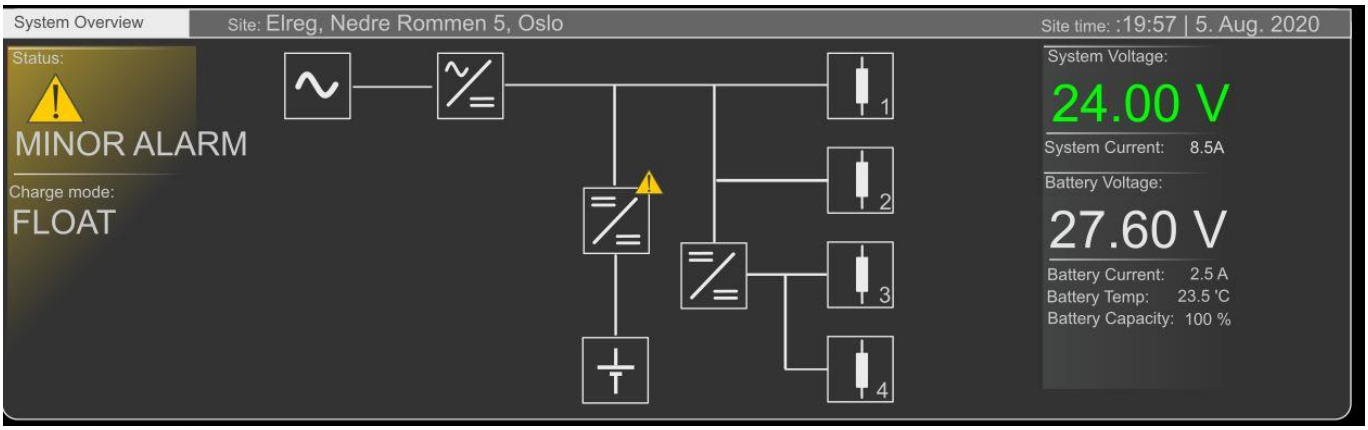

Figure 6. Minor alarm indication.

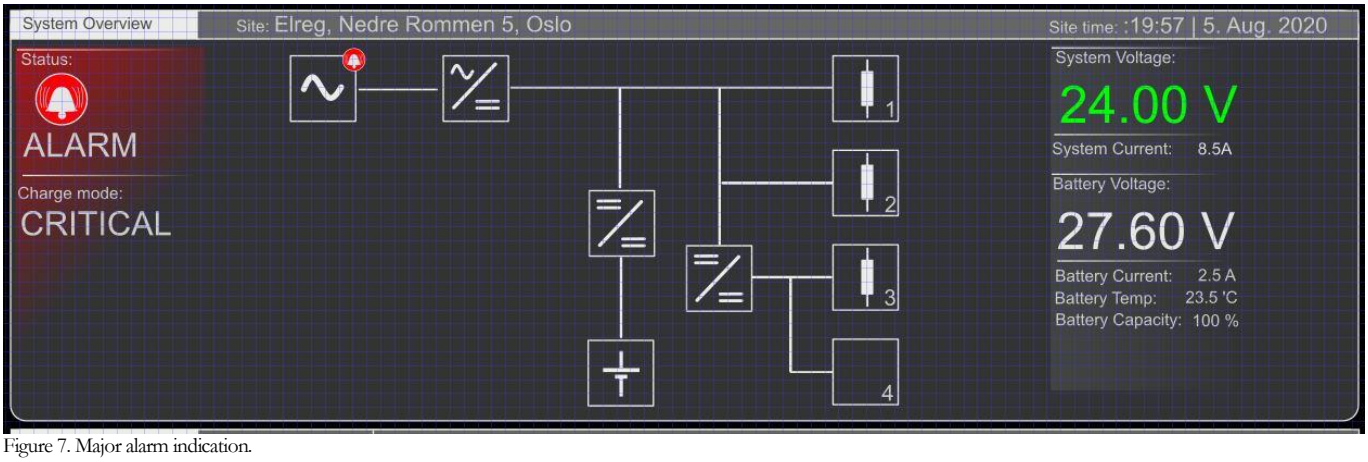

Figure 7. Major alarm indication.

System measurements

Real-time measurements or calculations appear on the right side of the System Overview panel:

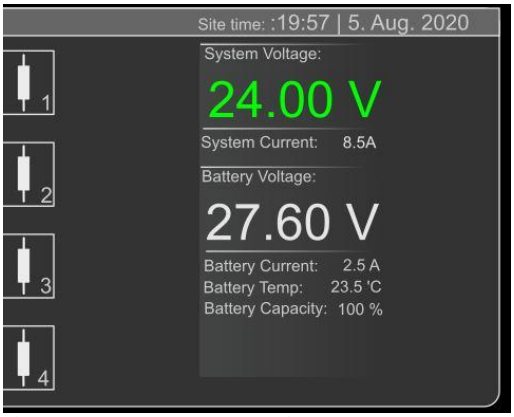

Figure 8. System measurements panel.

System history window

The system history window provides real-time graph of sys voltage, battery, load, and system events.

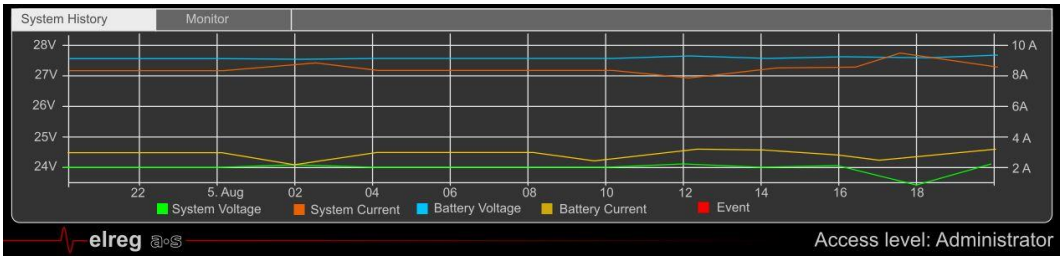

System monitor window.

The system monitor window provides real-time values of most of the measurements and inputs.

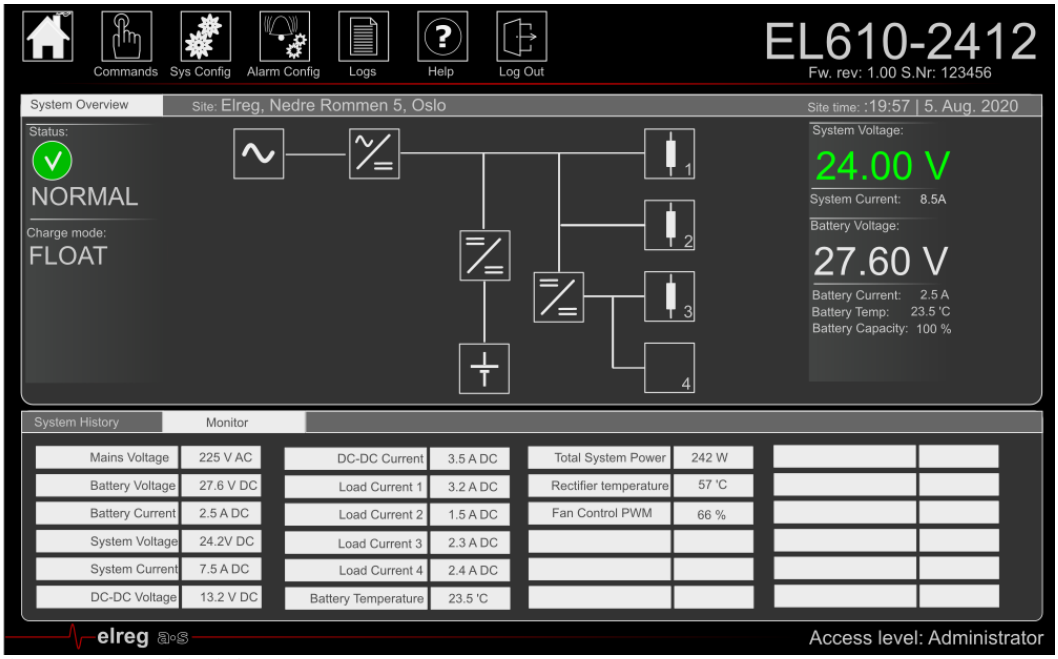

Figure 9. System Monitor Window

The visibility of shown parameters in the monitor window could be enabled and disabled in sys config.